ROCKET WOOD

AUSTROFLAMM



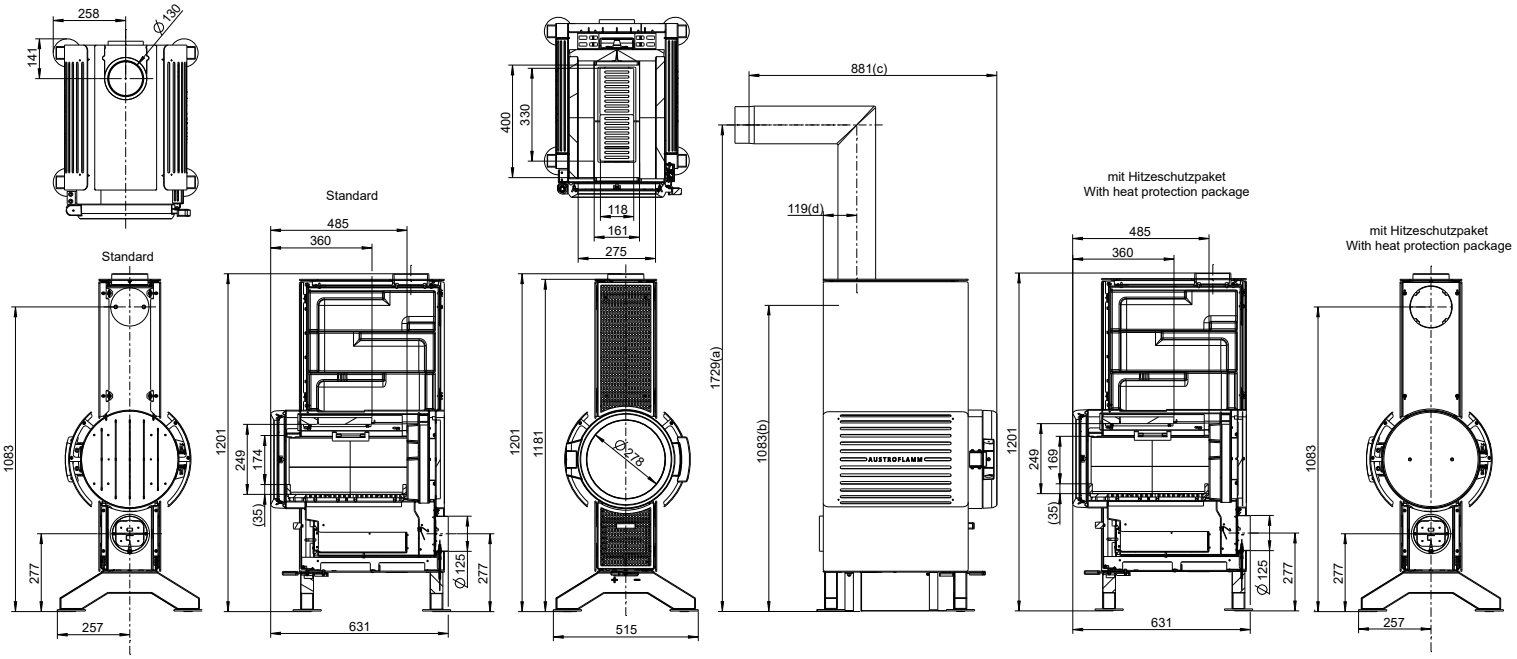

www.austroflamm.com

ROCKET WOOD

AUSTROFLAMM

Dimensions and weight

Height [mm]	1181
Width [mm]	515
Depth [mm]	631
Combustion chamber width [mm]	275
Combustion chamber height [mm]	249
Combustion chamber depth [mm]	400
Baking compartment width [mm]	-
Baking compartment height [mm]	-
Baking compartment depth [mm]	-
Warming drawer, width [mm]	-
Warming compartment height [mm]	-
Warming drawer, depth [mm]	-
Dimensions, a (with Austroflamm elbow piece) [mm]	1729
Dimensions, b (with Austroflamm elbow piece) [mm]	1083
Dimensions, c (with Austroflamm elbow piece) [mm]	881
Dimensions, d (with Austroflamm elbow piece) [mm]	119
Flue pipe outlet, diameter [mm]	130
Outside air connection diameter [Ø mm]	125
Weight, basic appliance [kg]	150
Weight Xtra [kg]	-
Weight, HMS [kg]	-
Total weight inc. steel case (STM) [kg]	177
Total weight inc. ceramic case (KGM) [kg]	-
Total weight inc. soapstone case (SPM) [kg]	-
Minimum distance to combustible materials - distance to rear dR [mm]	250/100
Minimum distance to combustible materials – left side dS_1 [mm]	250/ 250
Minimum distance to combustible materials – right side dS_2 [mm]	250/ 250
Minimum distance to adjacent combustible materials (e.g. furniture) dP [mm]	600/ 600
Minimum distance to combustible materials – floor in front dF [mm]	0/ 0
Minimum distance to combustible materials – bottom dB [mm]	0/0
Minimum distance to combustible materials – left side radiation area dL_1 [mm]	0/ 0
Minimum distance to combustible materials – right side radiation area dL_2 [mm]	0/ 0
Minimum distance to combustible materials – distance to ceiling dC [mm]	750/750
Minimum distance from non-flammable materials [mm]	50/50

Output

Nominal heat efficiency [kW]	6.0/6.1
Minimum heat output [kW]	NPD
Maximum heat output [kW]	6.0/6.1
Minimum room heating capacity [m³]	109/109
Maximum room heating capacity [m³]	171/171
Energy efficiency class	A+/A+
Energy efficiency index (EEI)	109/111
Direct heat output [kW]	6.0/6.1
Indirect heat output [kW]	NPD/NPD
Efficiency at nominal heat output [%]	82/83.7
Efficiency at part load heat output [%]	NPD/NPD

Data for the chimney sweep

Flue gas mass flow at nominal heat output [g/s]	5.8/5.8
Flue gas temperature [°C]	302/302
Minimum delivery pressure at nominal heat output [Pa]	12/12
at 0.8 times nominal heat output [Pa]	10/10

- not available

095001 11/11/2026
Technical and visual modifications, typographical and printer errors reserved

ROCKET WOOD

AUSTROFLAMM

Equipment	
Xtra heat storage technology	-
Heat Memory System	-
Type of fireplace	Type CA
Ash removal	Ash pan

List of abbreviations/index

	Room air independent	**Door lock**
Type CA	Yes	Mechanism for automatic door closing
Type CC	Yes	Manually closed and locked door, monitored by an alarm or closure control system
Type CM	Yes	Manually closed and locked door
Type BE	No	No special requirement

NPD - No performance determined

The safety distances indicated in this table are to be understood as follows:

Value 1 =	Standard version of the stove
Value 2 =	Safety distances with optional heat shield

- not available

095001 11/11/2026
Technical and visual modifications, typographical and printer errors reserved