Operating manual

Flok 2.0

AUSTROFLAMM

www.austroflamm.com

056006

Operating manual

14/10/2026

Version: 4.0

LEGAL NOTICES

Owner and publisher

AUSTROFLAMM GMBH
Austroflamm-Platz 1
A- 4631 Krenglbach
Tel: +43 (0) 7249 / 46 443
www.austroflamm.com
info@austroflamm.com

Edited by: Austroflamm GmbH

Illustrations: Konstruktion

Text: Technical department (Austroflamm)

Copyright
All Rights reserved. The contents of these instructions may be reproduced or distributed only with the consent of the publisher! Printing, spelling and typographical errors reserved.

The information in this document is subject to change without prior notice and should not be construed as a commitment by Austroflamm GmbH. Austroflamm GmbH assumes no responsibility for any errors that may appear in this document.

Contents

1 General information ... 5
1.1 Copyright ... 5
1.2 Information about the document ... 5

2 Purpose of the manual ... 6
2.1 Storing the manual ... 6
2.2 Structure of the manual ... 6
2.3 Representations used ... 6
2.4 Version control ... 6

3 Safety ... 7
3.1 Importance of the safety instructions ... 7
3.2 General safety instructions ... 7
3.3 Special types of danger and personal protective equipment ... 8

4 Product overview ... 9
4.1 Intended use ... 9
4.2 Identification of the product ... 9
4.3 Energy label ... 10
4.4 Positioning of the type plate ... 11

5 Technical data ... 12
5.1 Technical data according to Regulation (EU) 2015/1185 and delegated Regulation (EU) 2015/1186 ... 12
5.2 General specifications ... 15
5.3 Data for the chimney/flue dimensioning ... 16

6 Transport, handling and storage ... 17
6.1 Transportation ... 17
6.2 Transport aid ... 17
6.3 Storage ... 18

7 Requirements at the installation location ... 19
7.1 Safety distances to be observed ... 19
7.2 Combustion air ... 20
7.3 Chimney requirements ... 20
7.4 Floor load-bearing capacity ... 20
7.5 Floor condition ... 20
7.6 Room of installation ... 20

8 Fuel material/-quantity ... 21
8.1 Fuel ... 21
8.2 Fuel quantity ... 23

9 Installation ... 24
9.1 Rearranging the flue pipe connection ... 25
9.2 Converting external air connection ... 27
9.3 Installing Keramott ... 28

10 Settings **29**
10.1 Adjusting the door 29
10.2 Adjusting the door lock 30
11 Commissioning **32**
11.1 Initial Commissioning 32
11.2 Balanced Flue Operation 32
12 Operation **33**
12.1 Before heating up 33
12.2 Making fire correctly 33
12.3 Heating in the transition period 34
13 Maintenance **35**
14 Cleaning **36**
14.1 Cleaning the stove, flue gas ducts and flue pipe 36
14.2 Cleaning flue gas paths 36
14.3 Emptying the ash box 36
14.4 Cleaning the door window 37
14.5 Cleaning surfaces 38
15 Help **39**
15.1 Firebox lining 40
15.2 What to do in the event of a chimney fire 40
15.3 What to do in the event of faults 40
16 Accessories **41**
17 Spare parts **43**
18 Dismantling **44**
18.1 Removing side cladding 44
18.2 Removing the cover and rear panel 44
19 Disposal **46**
20 Guarantee / warranty **48**
21 Start-up log **49**
22 Service Report **50**

1 General information

You have decided in favour of an Austroflamm stove.

Congratulations on your decision and thank you for your trust.

Correct operation and care are essential for trouble-free operation and long service life.

The information in this manual is of a general nature. National and European standards, local and building regulations, together with fire regulations must be complied with.

Read this instruction through carefully before installation and operation. No liability or warranty claims apply for damage incurred by failure to follow this manual.

Please observe the instructions in the individual sections.

This manual is a component part of the stove. It includes all the important information for both the dealer and the customer.

Personally hand over this manual to the owner of the stove together with an introduction to the system (heating operations).

In the following list we give you an overview of which sections are important for whom:

Dealer	End customer
Complete operating manual	General information
	Purpose of the manual
	Safety
	Product overview
	Technical data
	Requirements at the installation location
	Fuel material/-quantity
	Settings
	Commissioning
	Operation
	Maintenance
	Cleaning
	Help
	Accessories
	Spare parts
	Disassembling
	Disposal
	Guarantee / warranty
	Data processing
	Start-up log
	Service Report

1.1 Copyright

All Rights reserved. The contents of these instructions may be reproduced or distributed only with the consent of the publisher! Printing, spelling and typographical errors reserved.

1.2 Information about the document

The information in this document is subject to change without prior notice and should not be construed as a commitment by Austroflamm GmbH. Austroflamm GmbH assumes no responsibility for any errors that may appear in this document.

2 Purpose of the manual

This manual is a component part of the stove and is intended to contribute to the stove being safely installed and maintained.

TIP

Please read this manual before using the stove for the first time.

2.1 Storing the manual

Store this manual in case you need it. A current version of the manual can be found online at our homepage www.austroflamm.com.

2.2 Structure of the manual

The table of contents can be found on page 3.

Illustrations in this manual may differ from the delivered product.

2.3 Representations used

The following representations are used in this manual:

Steps with mandatory adherence to the sequence

✓ Prerequisite

1) Step 1
2) Step 2
3) …..
   ⇨ Intermediate result / additional information

⇨ Result

Steps and bullet points without mandatory sequence

- ….
- ….
  - ….
  - ….

Cross-references

See Technical Data

Useful tips

TIP

Fuel

Use only the recommended fuel!

2.4 Version control

We update our manuals on a continual basis. The current version can be found at our homepage www.austroflamm.com.

This manual applies to all Flok 2.0 stoves with the article number 056006 and index d and newer.

3 Safety

In this manual we give you numerous safety instructions for the safe operation of your stove. These instructions are characterized differently as follows, depending on their importance:

3.1 Importance of the safety instructions

NOTICE

Particular behaviour and/or activities that are required for safe working. Failure to follow this can result in material damage.

⚠ CAUTION

Possible dangerous situation (light or minor injuries and material damage).

⚠ WARNING

Possibly imminent danger to life and health of persons (severe injuries or death).

⚠ DANGER

Immediately imminent danger to life and health of persons (severe injuries or death).

3.2 General safety instructions

- The information in this manual represents generally applicable standards and rules. For installing/operating a stove, all local regulations including those that relate to national and European standards, as well as emergency service regulations, must be complied with.
- Before operating your stove, carefully read through the entire manual and observe the instructions and warnings.
- Austroflamm GmbH accepts no liability or responsibility for the connection of our heating appliances to shared exhaust pipes/chimneys – **multiple occupancy**. For more information consult a chimney sweep and check your national, regional and local building regulations.
- Only approved transport aids with sufficient load-bearing capacity may be used to transport your stove.
- Caution - varnish is not an anti-rust protection!
- Burn only the fuel listed and approved in the section.
- It is strictly forbidden to burn or introduce highly flammable or explosive substances, such as empty aerosols and the like, into the firebox or to store them in the immediate vicinity of your stove due to the risk of explosion.
- No loose or easily flammable items of clothing should be worn when laying the fire.
- Please note that placing non-heat-resistant objects on, or near, the stove is forbidden.
- Do not place any items of laundry on the stove to dry. Laundry racks or the like must be placed at a sufficient distance from the stove. – (Fire hazard!)
- This stove is not a slow-burn fire.
- While your stove is in operation, it is forbidden to process highly flammable or explosive substances in the same room or in adjoining rooms.
- The stove must only be operated with the doors closed.
- The door and all the stove's control devices must be closed when the stove is not in operation.

- Please note that the surfaces of this stove heat up considerably during operation. We recommend that you use the protective glove supplied to operate your stove.

- Please alert children to these dangers, and keep them away from the stove when it is operating.

⚠ DANGER

Danger of overheating

To prevent damage you must **NEVER** operate your stove with a greater quantity of fuel than the quantity given in these instructions, either during its initial commissioning or every time you subsequently light it up again!

- Your stove is not suitable for use as a ladder or a stand.
- Waste materials (of any kind) or residues **MUST NOT** be burned in the stove.
- When working on or with the stove, always wear protective gloves. Example: moving the stove, assembling, disassembling, repairing, attaching accessories, etc.
- Sharp edges may be created during or after the installation of accessory parts. Please use suitable grinding or cutting tools to remove these sharp edges.

3.3 Special types of danger and personal protective equipment

For certain activities such as installation/dismantling, particular care must be taken that the following safety equipment is worn:

	Safety gloves
	Safety shoes

4 Product overview

4.1 Intended use

Compliance with the instructions contained here will guarantee the safety of people and the appliance, economic operation and a long service life. The stove has been designed according to standards based on technical data. See section “Technical Data“.

NOTICE

Operation is only permissible with closed/bolted door.

4.2 Identification of the product

Basic appliance dimensions

056006 Flok 2.0

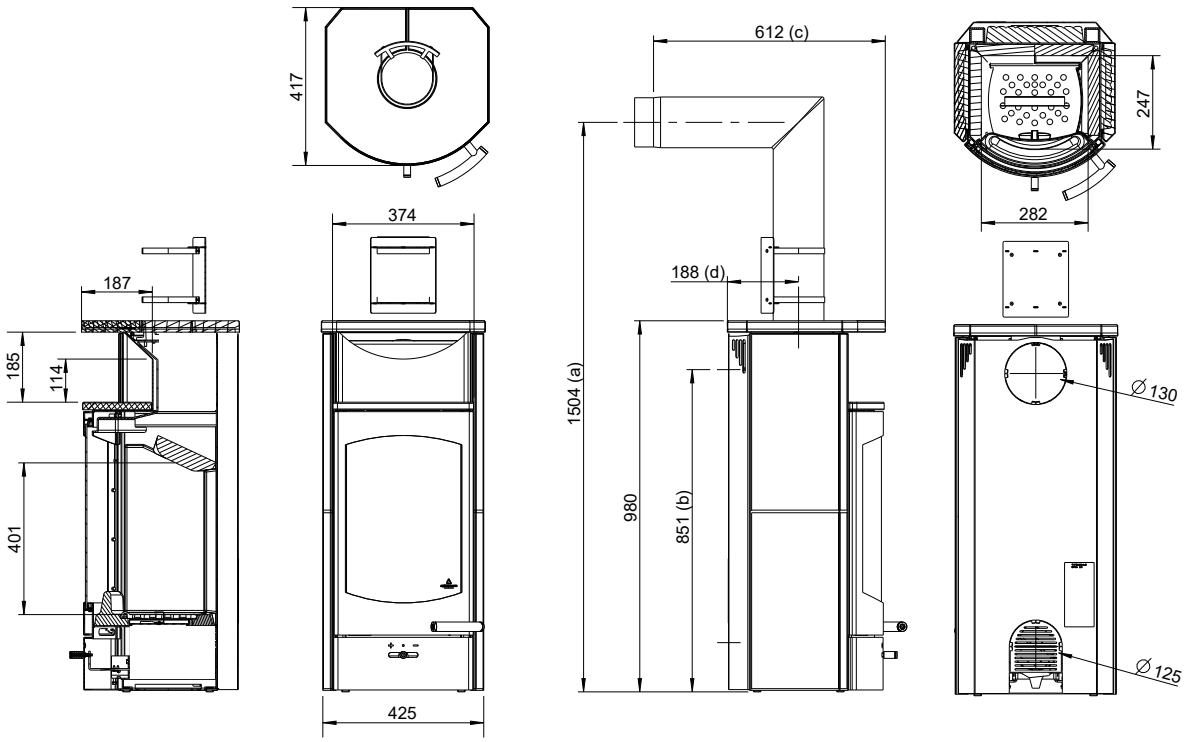

Fig. 1: Basic appliance dimensions

Dimensions with extension box

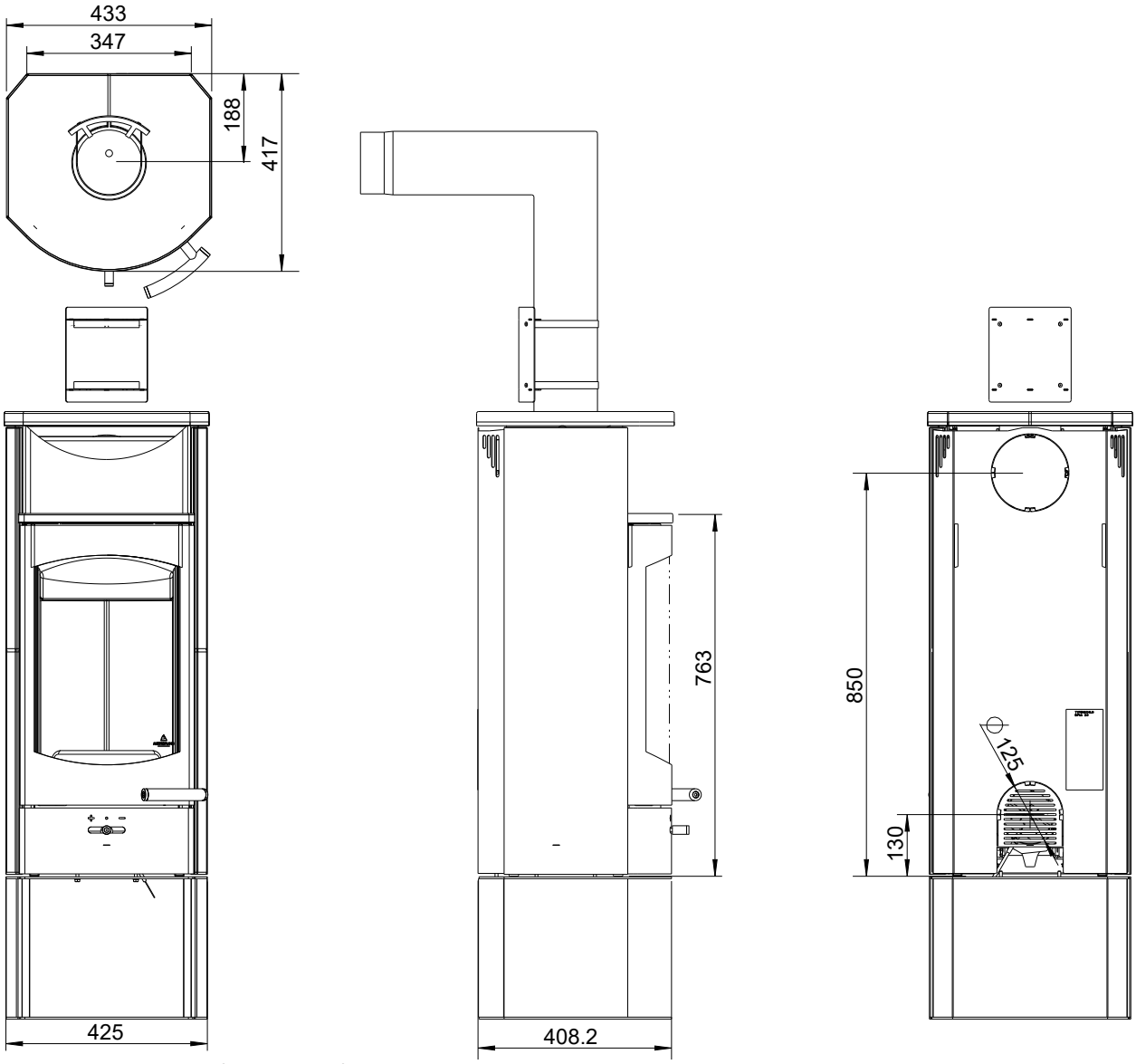

Fig. 2: Dimensions with extension box

Air control

Open (**+**) and closed (**-**), primary/secondary air controller (1)

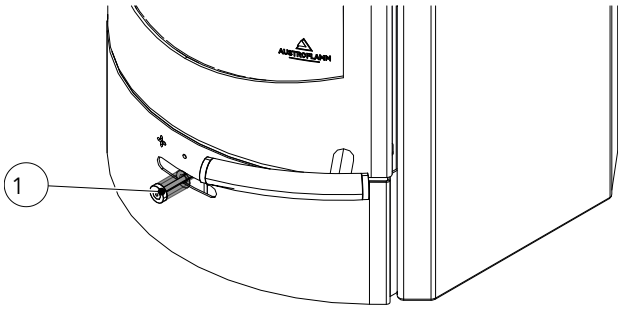

Fig. 3: Air control

4.3 Energy label

You can find the energy label on our homepage in the download section for your stove.

4.4 Positioning of the type plate

Here we show where you can find the type plate. You received a copy of the type plate with the stove. You can find a copy of the type plate of your stove on the back of the manual you get with your stove.

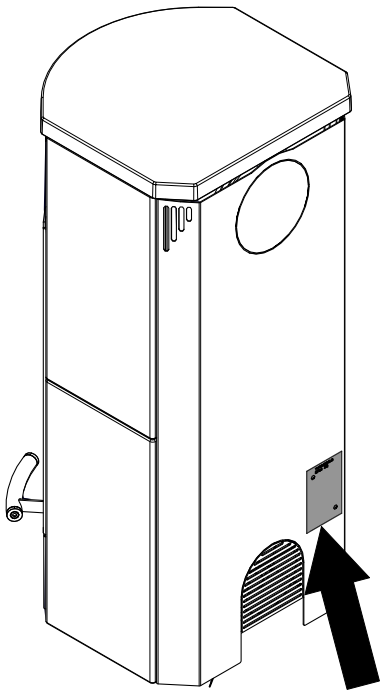

Fig. 4: Type plate

The type label is located at the back of the stove.

5 Technical data

A connection to a chimney already occupied with other solid-fuel stoves and ovens is possible provided that the chimney rating under DIN 4705 – part 3, does not contravene this.

5.1 Technical data according to Regulation (EU) 2015/1185 and delegated Regulation (EU) 2015/1186

Contact details for the manufacturer or their authorised representative

Manufacturer:	Austroflamm GmbH
Contact:	-
Address:	Austroflamm-Platz 1
	4631 Krenglbach
	Austria

Appliance details

Model identification(s):	Flok 2.0
Equivalent models:	-
Test reports:	1625 / RRF-1021 25 2047-1
Applied harmonized standards:	EN 16510-2-1:2022
Other standards/technical specifications. Specifications:	-
Indirect heating function:	No
Direct heat output:	4.0
Indirect heat output:	NPD

Properties for operation with the preferred fuel

Space heating annual use efficiency η_s:	71
Energy efficiency index (EEI):	107

Particular precautions for assembly, installation or maintenance

Described in the individual sections of the operating manual.

Fuel	**Preferred fuel (only one):**	**Other suitable fuel(s):**	**ηs [x%]:**	**Space heating emissions at nominal heating efficiency (*)**				**Space heating emissions at minimum heat output (*)**			
				PM	**OGC**	**CO**	**NOx**	**PM**	**OGC**	**CO**	**NOx**
				[x] mg/Nm³ (13% O2)				**[x] mg/Nm³ (13% O2)**			
Firewood, moisture content ≤ 25 %	yes	no	71	≤40	≤120	≤1500	≤200	NPD	NPD	NPD	NPD
Compregnated laminated wood, Moisture content < 12 %	no	no	-	-	-	-	-	-	-	-	-
Other woody biomass	no	no	-	-	-	-	-	-	-	-	-
Non-woody biomass	no	no	-	-	-	-	-	-	-	-	-
Anthracite and dry steam coal	no	no	-	-	-	-	-	-	-	-	-
Coking coal	no	no	-	-	-	-	-	-	-	-	-
Semi-coke	no	no	-	-	-	-	-	-	-	-	-
Bituminous coal	no	no	-	-	-	-	-	-	-	-	-
Lignite briquettes	no	no	-	-	-	-	-	-	-	-	-
Peat briquettes	no	no	-	-	-	-	-	-	-	-	-
Briquettes made from a mixture of fossil fuels	no	no	-	-	-	-	-	-	-	-	-
Other fossil fuels	no	no	-	-	-	-	-	-	-	-	-
Briquettes made from a mixture of biomass and fossil fuels	no	no	-	-	-	-	-	-	-	-	-
Other mixture made of biomass and solid fuels	no	no	-	-	-	-	-	-	-	-	-
(*) PM = dust, OGC = organic gaseous connections, CO = carbon monoxide, NOx = nitrogen oxide											

Properties for exclusive operation with the preferred fuels

Specification	Symbol	Value	Unit		Specification	Symbol	Value	Unit
Heat output					**Thermal efficiency (fuel efficiency) (based on the NCV)**			
Nominal heat efficiency	Pnom	4.0	kW		thermal efficiency (fuel efficiency) at nominal heat output	ηth,nom	81	%
Minimum heat output (standard value)	Pmin	NPD	kW		thermal efficiency (fuel efficiency) at minimum heat output (standard value)	ηth,min	NPD	%
Auxiliary power consumption					**Type of heat output/room temperature control**			
At nominal heat efficiency	elmax	NPD	kW		Single-stage heat output, no room temperature control			yes
At minimum heat output	elmin	NPD	kW		two or more manually adjustable levels, no room temperature control			no
In standby condition	elSB	NPD	kW		Room temperature control with mechanical thermostat			no
Pilot flame power requirement					with electronic room temperature control			no
Pilot flame power requirement (if present)	Ppilot	-	kW		with electronic room temperature control and daytime regulation			no
					with electronic room temperature control and weekday regulation			no
					Other regulation options (Multiple selections possible)			
					Room temperature control with presence detection			no
					Room temperature control with open window detection			no
					with remote control option			no

NPD - No performance determined

5.2 General specifications

Dimensions and weight	
Height [mm]	980
Width [mm]	425
Depth [mm]	417
Combustion chamber width [mm]	282
Combustion chamber height [mm]	401
Combustion chamber depth [mm]	247
Baking compartment width [mm]	NPD
Baking compartment height [mm]	NPD
Baking compartment depth [mm]	NPD
Warming drawer, width [mm]	374
Warming compartment height [mm]	185
Warming drawer, depth [mm]	187
Dimensions, a (with Austroflamm elbow piece) [mm]	1504
Dimensions, b (with Austroflamm elbow piece) [mm]	851
Dimensions, c (with Austroflamm elbow piece) [mm]	612
Dimensions, d (with Austroflamm elbow piece) [mm]	188
Flue pipe outlet, diameter [mm]	130
Outside air connection diameter [Ø mm]	125
Weight, basic appliance [kg]	78
Weight Xtra [kg]	NPD
Weight, HMS [kg]	53
Total weight inc. steel case (STM) [kg]	86
Total weight inc. ceramic case (KGM) [kg]	NPD
Total weight inc. soapstone case (SPM) [kg]	130
Minimum distance to combustible materials - distance to rear dR [mm]	270/ 70
Minimum distance to combustible materials – left side dS_1 [mm]	230/ 250
Minimum distance to combustible materials – right side dS_2 [mm]	230/ 250
Minimum distance to adjacent combustible materials (e.g. furniture) dP [mm]	1000/ 1100
Minimum distance to combustible materials – floor in front dF [mm]	460/ 560
Minimum distance to combustible materials – bottom dB [mm]	0/0
Minimum distance to combustible materials – left side radiation area dL_1 [mm]	510/ 590
Minimum distance to combustible materials – right side radiation area dL_2 [mm]	510/ 590
Minimum distance to combustible materials – distance to ceiling dC [mm]	750/750
Minimum distance from non-flammable materials [mm]	50/50

The safety distances indicated in this table are to be understood as follows:

Value 1 = Standard version of the stove

Value 2 = Safety distances with optional heat shield

Output	
Nominal heat efficiency [kW]	4.0
Minimum heat output [kW]	NPD
Maximum heat output [kW]	4.0
Minimum room heating capacity [m³]	73
Maximum room heating capacity [m³]	114
Energy efficiency class	A+

HMS– Memory System

NPD - No performance determined

5.3 Data for the chimney/flue dimensioning

Exhaust gas values for the multiple occupancy of the chimney (according to DIN 18160-1) or rating of the chimney (according to DIN EN 13384-2).

Data for the chimney sweep	
Flue gas mass flow at nominal heat output [g/s]	3.92
Flue gas temperature [°C]	343
Minimum delivery pressure at nominal heat output [Pa]	12
at 0.8 times nominal heat output [Pa]	10

6 Transport, handling and storage

6.1 Transportation

Fig. 5: Crate

Every Austroflamm stove is packed for protection and environmental friendliness.

The packaging consists of:

- The pallet,
- crate and
- protective film.

1) The packaging consists of untreated local wood or materials.
2) Use a lifting truck or forklift to transport the crate including the stove.
3) The stove is secured with cable binders to the side struts of the crate. These cable binders must be removed.
4) The crate is dismantled by the removal of the 4 screws which connect the bottom of the crate to the pallet.
5) The loose wooden crate must be removed from the stove.
6) Undo the stove from the pallet. To do so, 4 metal claws on the palette surface must be unscrewed.
7) The air cushion / transport protection for the Keramott and the tension plate in the firebox must be removed.
8) Immediately check the goods delivered for completeness and damage in transit.
9) Check the accessory kit: Start up Box, user instructions, information sheets etc. the accessory kit is in the firebox.
10) Before installing the stove, check that all movable parts are working. Any defects before the installation of the stove must be reported.

6.2 Transport aid

NOTICE

It is vital that the transport aid be removed before installing the appliance!

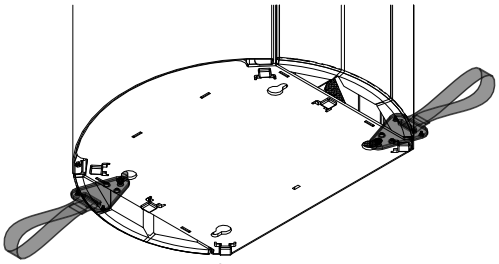

Fig. 6: Transport aid

Only approved transport aids with sufficient load-bearing capacity may be used for transport. These must be removed before installation.

6.3 Storage

The stove must be stored in a dry room/warehouse. Protect against dirt, heat and moisture.

The following illustrations are attached to the crate and must be observed:

- Fragile – always place upright – protect against moisture and store dry.

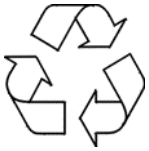

- Remove and dispose of packing material in an environmentally friendly manner.

- The crate can be disposed of in the separate collection for packaging. Local disposal regulations must be observed.

7 Requirements at the installation location

7.1 Safety distances to be observed

If your floor is made of a combustible material, a non-combustible material must be used as protection in the area in front of the appliance. For more detailed information, please contact an Austroflamm dealer.

NOTICE

A floor protection plate must be used if your floor is made from a combustible material.

Safety distances for combustible objects, such as wooden furniture, upholstered furniture, sofas, etc. must be complied with. In the case of very heat-sensitive objects the distance from the stove must be increased in order to avoid damage from the heat.

Please refer to the table below for the necessary safety distances.

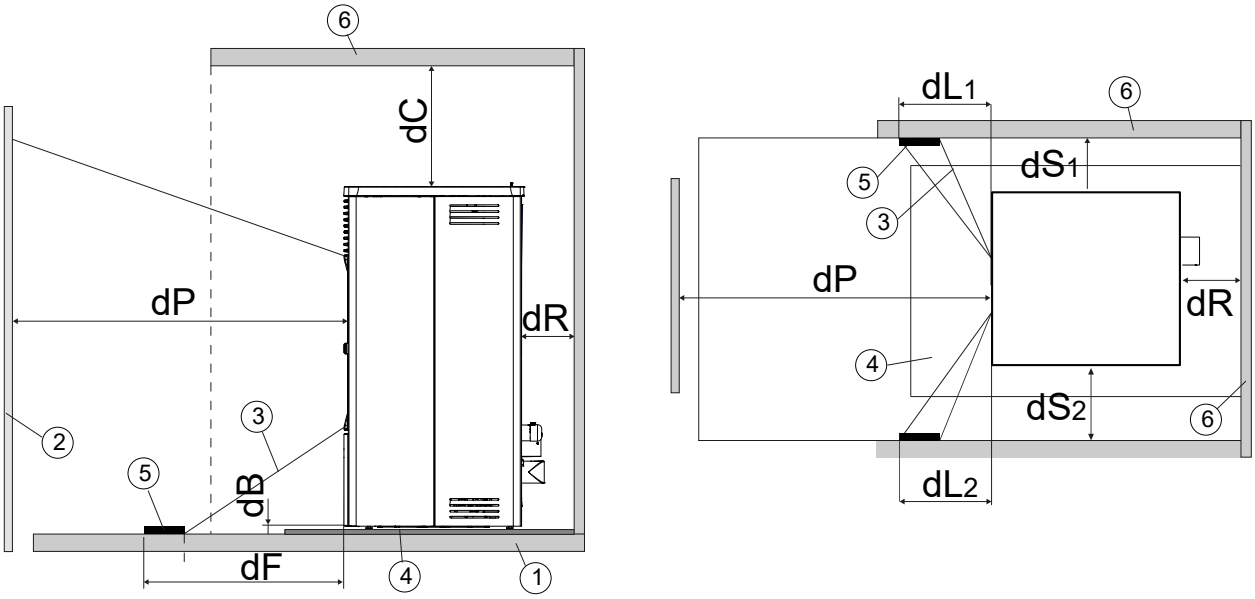

1	Floor	2	Combustible materials in front
3	Irradiated area	4	Floor protection plate
5	Irradiated area to be protected	6	Area of combustible materials area front/ side/back

Safety distance from the fuel	
Minimum distance to adjacent combustible materials (e.g. furniture) dP [mm]	1000/ 1100
Minimum distance to combustible materials – left side dS_1 [mm]	230/ 250
Minimum distance to combustible materials - distance to rear dR [mm]	270/ 70
Minimum distance to combustible materials – right side dS_2 [mm]	230/ 250
Minimum distance to combustible materials – bottom dB [mm]	0/0
Minimum distance to combustible materials – floor in front dF [mm]	460/ 560
Minimum distance to combustible materials – left side radiation area dL_1 [mm]	510/ 590
Minimum distance to combustible materials – right side radiation area dL_2 [mm]	510/ 590
Minimum distance to combustible materials – distance to ceiling dC [mm]	750/750
Minimum distance from non-flammable materials [mm]	50/50

The safety distances indicated in this table are to be understood as follows:

Value 1 = Standard version of the stove

Value 2 = Safety distances with optional heat shield

7.2 Combustion air

An adequate supply of combustion air must be provided during operation. With a modern very thick building shell it can happen that the combustion air supply is not guaranteed for balanced flue operation or that the draft behaviour is impaired. In this case an adequate supply of combustion air must be provided. Your Austroflamm specialist dealer will be happy to advise you.

TIP

Ensure that combustion air openings are not closed!

7.3 Chimney requirements

When connecting the flue pipes to the chimney, national and/or local safety regulations must be complied with. Your Austroflamm stove is fitted at the factory with a flue pipe outlet at the top (see chapter Technical data). The connection can, as described in these instructions, be rearranged to the bottom. When connecting with other pipe diameters the approval of your responsible chimney sweep is required. The flue pipe connection and flue pipe transitions must be sealed accordingly. Your Austroflamm specialist dealer knows the guidelines and will be happy to advise you. For your own safety the connection of the flue pipe must be carried out by a technically competent person.

7.4 Floor load-bearing capacity

Before installing, verify whether the load-bearing capacity of the substructure can withstand the weight of your Austroflamm stove.

With regards to loading capacity, for floors with underfloor heating we refer you to your structural engineer responsible for statical calculations, builder, etc.

7.5 Floor condition

Austroflamm stoves can be placed directly on the floor.

The fire protection regulations for operating a wood-burning or pellet stove vary depending upon the location and appliance. We recommend you obtain this information from your chimney sweep or the specialist dealer in your area.

7.6 Room of installation

Note that the room in which the stove is installed must have at least one door / one window leading to the outside, or be directly connected to such a room. For balanced flue operation, other heating appliances and extractor hoods must not be operated together with this heating appliance as part of the room air system.

8 Fuel material/-quantity

8.1 Fuel

Wood

Many of our native types of wood can, after being appropriately dried, be burnt CO2-neutral in heat-producing appliances. Wood stands out because it grows again, can be sustainably harvested, requires little or no extra external energy to be invested in the fuel, and has a short journey from the producer to the consumer, which provides an optimal climate balance.

The most common types of wood to use in the stove are beech, yoke elm, birch, larch, spruce and pine. The most important criterion for burning in a heat-producing appliance is that the fuel has been sufficiently dried through. For this purpose, the prepared pieces of firewood should be stored for at least two years. The legislator stipulates a maximum water content of 20%. That is still however a lot of water sitting in the capillaries of the wood. A piece of firewood only becomes good when its water content comes to a maximum of 12 to 13%. The differences in combustion behavior are striking and clearly detectable even by the layman.

Types of wood other than the ones referred to above are also suitable for burning. However, each heat-producing appliance should be checked for how their use affects combustion behaviour. Oak for example burns with a rather shorter flame and more embers. Oakwood catches fire with greater difficulty, and due to hardness of the wood it is not split as well (small) as other types of wood, which again has a negative effect on combustion behavior. It is however a good energy source, and, correctly processed, also suitable as firewood.

Softwoods (fir, pine, spruce) should if possible be mixed with hardwood. Softwoods have a higher proportion of tannin, which leads to more deposits in the heat-producing appliance, the connecting pipes and the chimney. If only softwood is burnt, this can lead more quickly to a build-up of shining soot. Mixing with hardwood (for example, beechwood) reduces this effect.

The size of your heat-producing appliance's combustion chamber will dictate whether your firewood is 25cm, 33cm or 50cm in length. 50cm pieces of firewood should preferably dry for somewhat longer (lain down for three years or more), because wood is dried out mainly by the leakage of water from the capillaries - and that simply takes time. And the path from inside to outside in a 50cm-long piece of firewood is twice as long as in a 25cm-long piece of firewood. The important thing is that the wood is well split. This means that the circumference of a piece of firewood (once all sides are measured around the cutting point) must be a maximum of 15-25cm. Pieces of wood cut to this size dry more easily - above all, however, they give the fire (the temperature) a greater attack area and thus make it easier to evolve gas and thus to burn. Also, the quantity of fuel can be better measured out. Thanks to their outstanding levels of efficiency, modern heat-producing appliances require just a fraction of the amount of wood of earlier stoves. Here smaller pieces of firewood can be placed according to the manufacturer’s specifications - large pieces of wood often exceed the maximum specified quantity with just a single piece.

The Start-up Box includes a moisture meter for determining the water content of the wood. Combined with careful observation of the burning behaviour, it allows you to check whether your fuel is suitable. A “good” wood fire will only smoke briefly in the ignition phase, hardly at all after that. It will burn with a light (yellow to orange-colored) long flame. Little residue will occur in the combustion chamber, most of it disappearing again when the fire is fully developed. Another good criterion for assessing whether a piece of firewood is suitable for combustion is its weight. Most manufacturers also specify the amount to be laid in kg. Example: a piece of beechwood 33cm in length with a circumference of approx. 20cm weighs approx. 1kg when it is suitable (dry enough) for burning. Therefore, 25cm in length gives approx. 750 grammes, and 50 cm in length approx. 1.5kg.

Please observe at all times the maximum specified amount to be laid, even when putting on more wood! Otherwise your fire will not provide the desired efficiency - but above all considerable damage may be caused to your appliance, to gaskets and material and to the flue gas duct.

The wood may only be burnt untreated. NEVER burn treated woods, not even wood processed with natural substances or organic glazes. Wood waste does not belong in the stove!

Wood briquettes

Many people like wood briquettes as a fuel because they require less storage space than wood, can be stocked or sold in small quantities and - at least at first glance - make less work than wood. Within the scope of production, the quality of briquettes is consistent. Wood briquettes do not need to be stored for a long time to be dried out. Due to the raw material (unrefined chips) and the production process they have an already defined residual moisture.

If wood briquettes are designated as a suitable fuel, then this still only applies to this fuel, NOT for coal-, paper-, bark- or other pressed items, such as pellets.

In spite of various standardizations and many advertising promises, there are also considerable differences in quality in wood briquettes. But even with good fuel quality, combustion behavior is different from that of unrefined log. And not every wood briquette burns equally well in every stove. Before you decide on a particular variety and perhaps even store this up in larger quantities, you should extensively test the wood briquettes under various draft conditions. Most suppliers keep “test packages” for this purpose that can be purchased at preferential prices to test out and compare with one another the various types offered.

TIP

When burning wood briquettes, the maximum quantity specified in these instructions must also be observed. The quantity must not be exceeded.

As the wood is pressed and thus has little spatial volume for the same weight, modern heat-producing appliances with a low placement quantity often have “little fire heaps” occur, leading one to wonder whether a fire can burn at all with so little fuel. Nevertheless, you must never exceed the maximum placement, because that would cause damage. Many wood briquettes change during the temperature increase when burning, by “opening up”. This should not worry you as it is normal. When inserting wood briquettes make sure that this expansion as far as possible does not press not in the direction of the window, as otherwise this will get very dirty.

In principle you should not insert wood briquettes as one piece, but rather break them at the layer thicknesses, which are usually visible in slices, and place smaller pieces in the combustion chamber, not in an interlocking manner, but randomly. This way you will ensure that the combustion air reaches more burning material and flows around it better. Wood briquettes require a stronger air current, an expert eye and perhaps a bit more patience, until you get the knack of it. Since less volume is available (although the same mass, it takes less space up), the fire is generally smaller and does not burn so high and vivaciously as when burning log. When wood briquettes alone are burnt, this therefore generally leads to haziness in the combustion chamber, as well as on the stove window. Not all areas of the combustion chamber have the same temperature applied to them as when unrefined wood is burnt, which is why these deposits occur. It may be that with one variety of wood briquettes more deposits occur, whereas with another variety none at all. This suggests trying out various varieties to determine the suitable fuel for your heat-producing appliance. If you would really like to use wood briquettes, but don’t get on quite well with them, then it may also help to mix the fuel. That means: Burn wood briquettes and unrefined log in the mixture ratio that achieves a good burning result for your heat-producing appliance.

Wood briquettes must also be stored dry. In general, it can be said that pressed items with a hole in the middle usually burn better. Soft wood briquettes are to be preferred and are often more suitable than hard wood briquettes.

Approved fuel

Dry, properly stored, unrefined log (preferably hard wood) is permitted as fuel for our stoves.

Round wood must be split at least once so that it lights better. The diameter of the split piece of wood must not exceed 7 cm.

Explosive substances

It is strictly forbidden to burn or introduce highly flammable or explosive substances (empty aerosols and the like) into the firebox or to store them in the immediate vicinity of your stove. Risk of explosion!

Fuel

Only burn the recommended fuel.

Clean combustion

The firewood must be dry (rel. wood moisture < 15 %) and untreated. Furthermore, the correct quantity of firewood must be burnt in order to achieve a clean, low-emission combustion.

8.2 Fuel quantity

Maximum fuel quantity

Your Austroflamm stove is designed for maximum efficiency: see Technical Data section. Too great a quantity of fuel can lead to overheating and damage to your Austroflamm stove!

Maximum amount of fuel to be deposited: 0.8kg wood.

NOTICE

Overheating

Too great a quantity of fuel can lead to overheating and damage to your Austroflamm stove

NOTICE

To avoid damage, you must **NEVER** operate your stove a greater quantity of fuel than that specified in this manual!

9 Installation

Installation must only be carried out by an authorized specialist company.

Before installing the stove, check that all movable parts are working. Any defects must be reported before the installation.

In the following sections we will give you information on

- the integration or attachment of appliance parts,
- the rearrangement of the flue pipe connection
- The connection of the combustion air supply, and on
- other important facts relating to the installation.

The protective equipment and tools listed are required for the following work steps

Type of protective equipment	
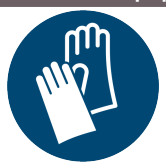	Safety gloves
	Safety shoes

Work equipment	Activity
Insulated tools	In order not to damage or scratch the varnish, no sharp objects or tools should be used. Instead **insulated tools** are used by preference when assembling and disassembling stove parts.
Torx wrench set	various installation jobs
Allen key set	various installation jobs
Fork wrench set	various installation jobs

9.1 Rearranging the flue pipe connection

1) Removing the cover and rear panel. See Removing the cover and rear panel [▶on page 44]
2) Use side cutters to remove the perforated cut-out in the rear panel.

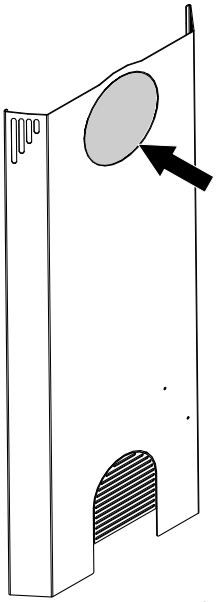

Fig. 7: Removing the perforated cut-out

3) Remove cover on the back.
4) Remove flue pipe bracket.

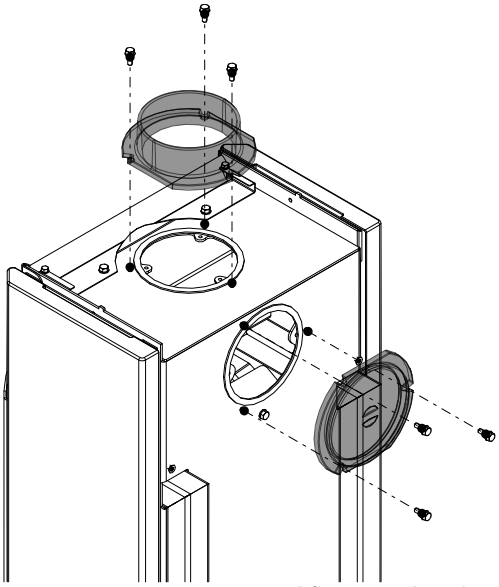

Fig. 8: Removing cover and flue pipe bracket

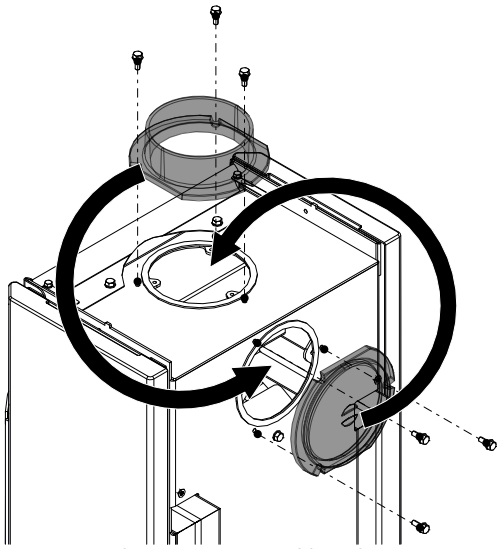

Fig. 9: Replacing cover and bracket

5) Replace parts and reinstall.

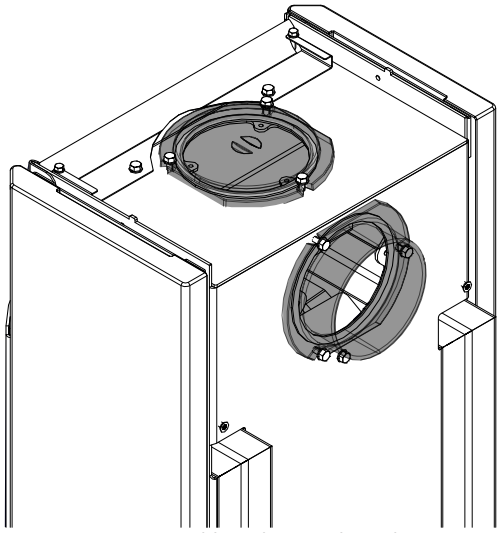

Fig. 10: Cover and bracket replaced

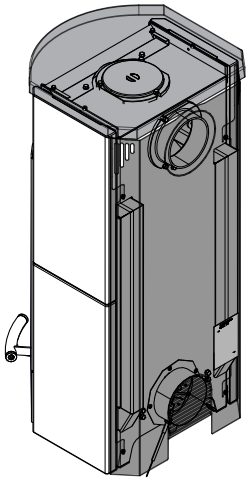

Fig. 11: Mount rear panel and attach cover

6) Attaching side cladding and cover.

9.2 Converting external air connection

1) Removing the cover and rear panel. See Removing the cover and rear panel [▶on page 44]
2) Use side cutters to remove the perforated cut-out (below) in the rear panel.

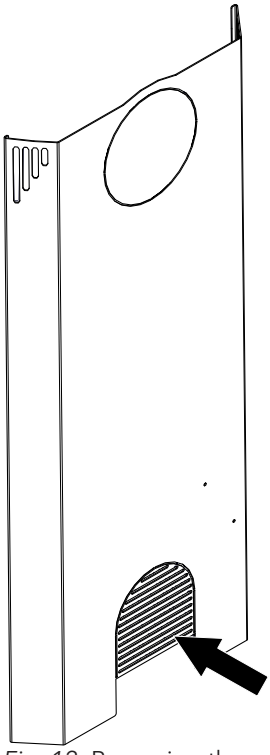

Fig. 12: Removing the perforated cut-out

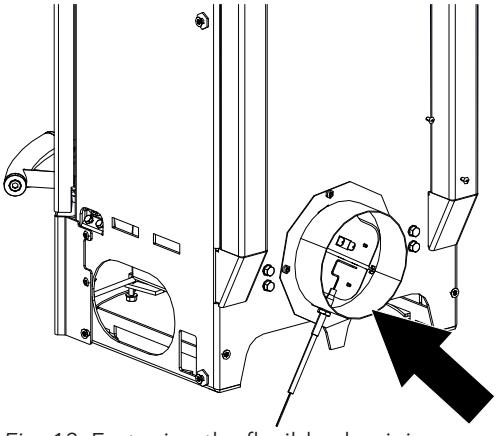

Fig. 13: Fastening the flexible aluminium hose

3) Fasten a flexible aluminium hose with a clamp to the air supply connection.
4) Pull through the flexible aluminium hose at the rear lower opening.

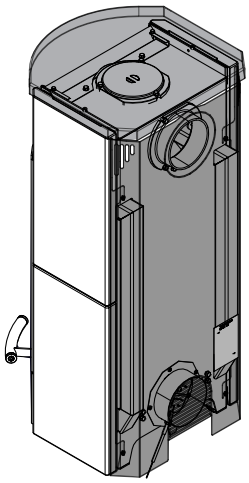

Fig. 14: Mount rear panel and attach cover

5) Attaching side cladding and cover.

9.3 Installing Keramott

Numbering = installation sequence

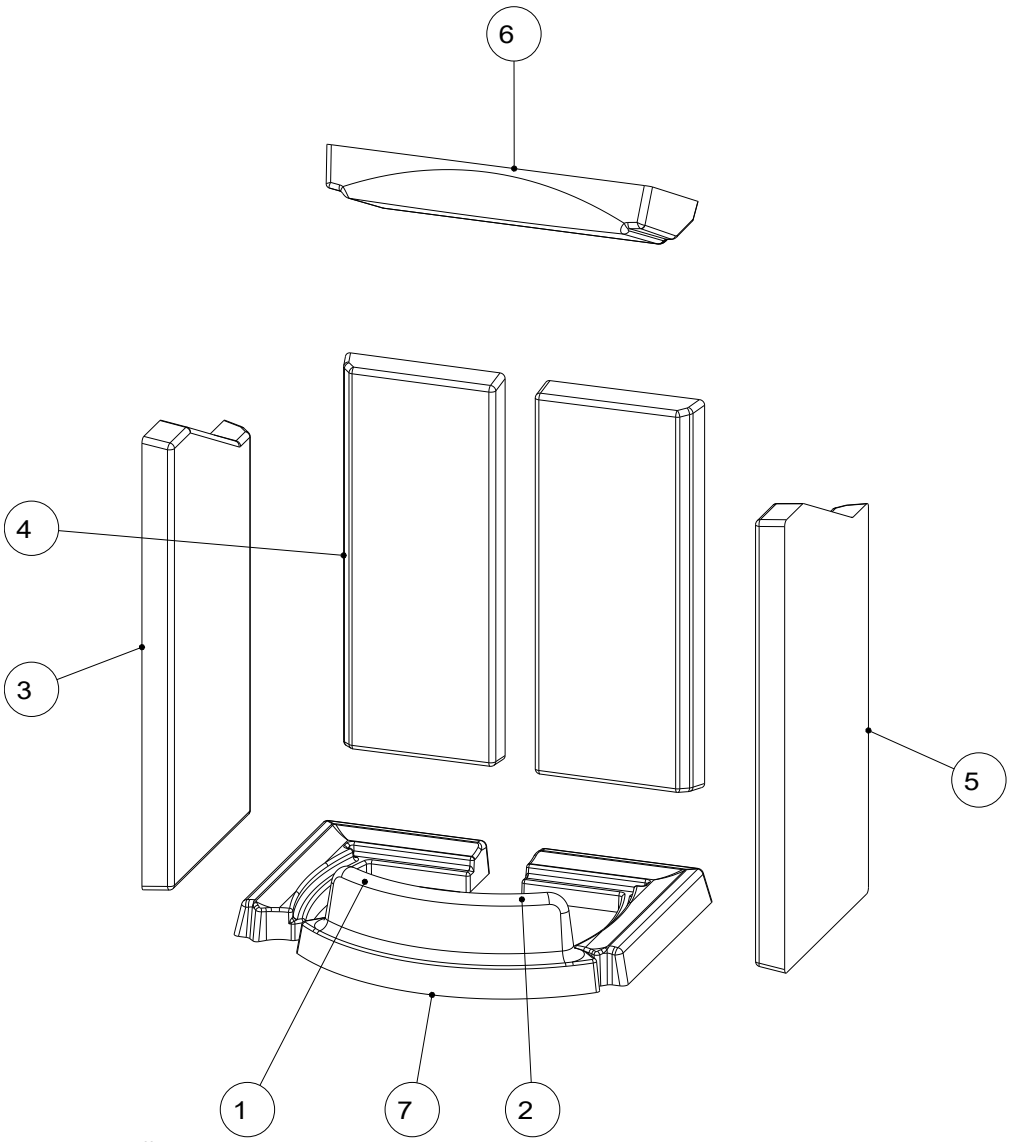

Fig. 15: Installing Keramott

10 Settings

10.1 Adjusting the door

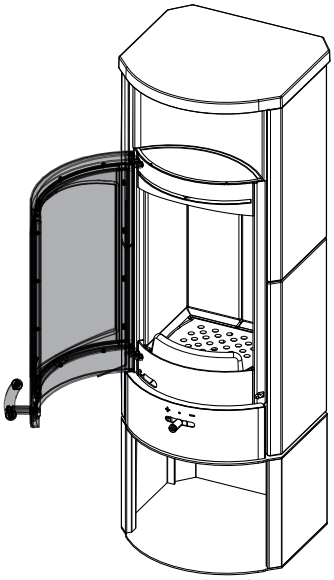

Fig. 16: Opening the door

1) Open the door.

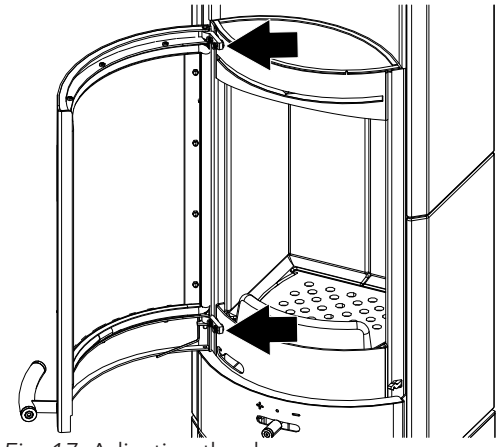

Fig. 17: Adjusting the door

2) Using the screws the door can be adjusted up, down, left and right.

10.2 Adjusting the door lock

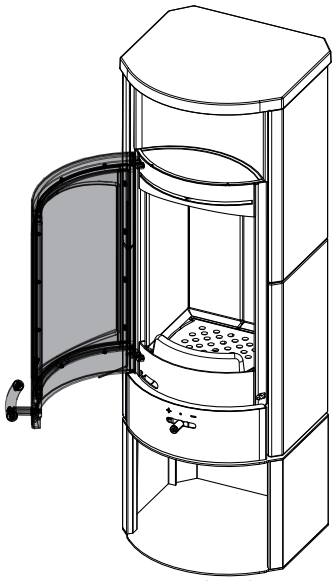

Fig. 18: Opening the door

1) Open the door.

2) Remove the right side panel. Proceed as described in the section Removing the side cladding [▶on page 44].

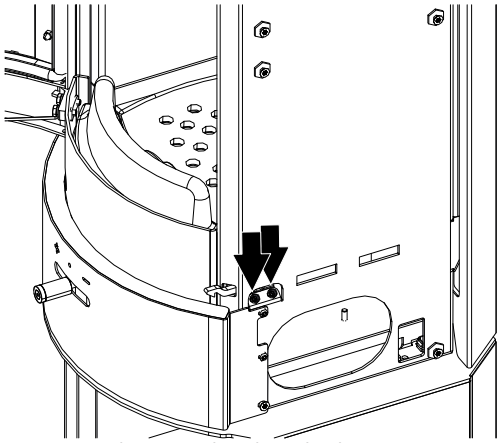

Fig. 19: Adjusting the door lock

3) Using the marked screws the door lock can be adjusted forwards and backwards.

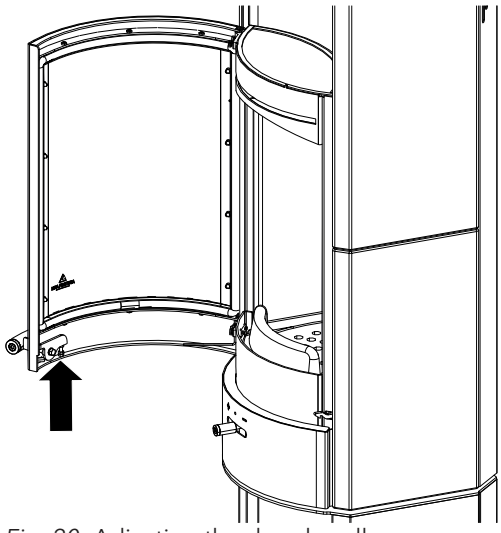

Fig. 20: Adjusting the door handle

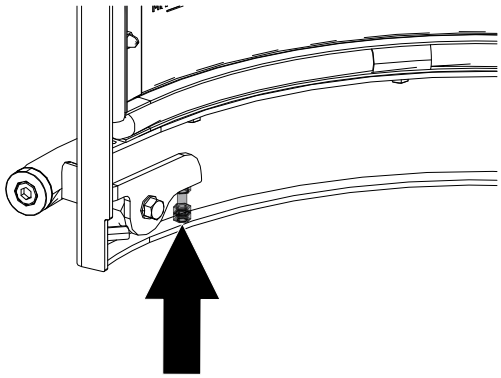

4) The rabbet for the door handle can be adjusted using the screws.

11 Commissioning

11.1 Initial Commissioning

NOTICE

During the initial commissioning and in the following 2-3 firing cycles, only approx. 2/3 of the maximum fuel quantity is to be used.

NOTICE

When commissioning for the first time and during the following 2-3 firing cycles, the oven door should be left slightly open so that any residual moisture in the oven lining can escape.

NOTICE

To avoid damage, you must **NEVER** operate your stove a greater quantity of fuel than that specified in this manual!

During the first 3-4 combustion cycles at nominal heat output, odours may develop. The odours are caused by the evaporation of sheet metal greases and binding agents from the varnishing. Although unpleasant, these fumes are completely non-toxic. We therefore recommend that you well ventilate the room for the first few fires.

1) Remove all enclosed documents and appliance parts from the fireplace.
2) Read the operating manual through carefully before the initial commissioning.
   ⇨ For optimally lighting we refer you to the section Making fire correctly.

Removing the ash box cover

Before the stove is operated for the first time, it is absolutely vital to remove the cover of the ash box from the stove.

Proceed as follows: (for a better understanding, see also steps 1 and 2 in the operating manual in section Emptying the ash box)

1) Open door.
2) Raise the grate with the hook supplied.
3) Take off the cover and lift it up.
   ⇨ Cover is inserted incorrectly when delivered.
   ⇨ You need the cover when you empty the ash box.
   ⇨ To empty the ash box, we refer you to the section Emptying the ash box.

11.2 Balanced Flue Operation

For balanced flue operation, the stove must be fed directly from the outside to the fireplace via an airtight duct with barrier. This way the stove can also be operated in units with mechanical airing or ventilation. This applies to all countries except Germany. In Germany an additional test is required.

12 Operation

12.1 Before heating up

The stove can only function properly if there is sufficient combustion air coming to the room of installation (the appliance), specially, if several firing installations are being operated at the same time. Ensure sufficient air supply before heating up. Open the combustion air flap on the stove and keep it open for the entire combustion period.

Devices for the supply of combustion air must not be modified.

12.2 Making fire correctly

To ensure the stove operates correctly and safely, it is important that the chimney generates the required draft. This must be checked in particular for each initial commissioning (e.g. after summertime) and in the transitional periods (e.g. when the wind is strong). If there is insufficient required draft, then paper or softwood chips can first be burnt in order to bring stove and chimney flue to temperature.

The air inlet of the stove must not be closed.

1) Clean grate.
2) If necessary empty ash box/ash pan (beware of embers).
3) Completely open the primary/secondary air control (1).
   ⇨ "OPEN" "+" position

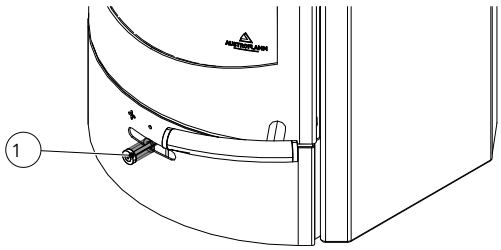

Fig. 21: Primary/secondary air control

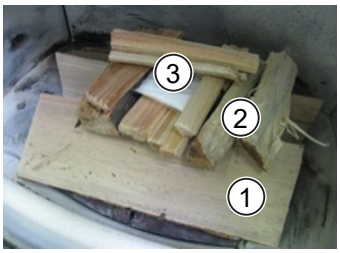

Fig. 22: Before kindling

4) Lay 2-3 pieces of log (1) (beech, oak, birch) across the bottom of the firebox.
5) Finely split softwood above it (2).
6) Place a firelighter (3) in the middle and light it.
   ⇨ Never use petrol, spirit or similar for ignition!

1	Firewood
2	Softwood
3	Firelighter

7) Close the door.
   ⇨ It is best to allow the first layer of wood to combust without altering the air damper setting.
   ⇨ If only the bed of embers is left (no more flames), you can place another layer of log.
8) When stoking up, proceed as for heating up:
   ⇨ Open combustion air supply.
   ⇨ Carefully open stove door.
   ⇨ Put wood on.
   ⇨ Close door.

Fig. 23: Flame pattern

9) As soon as the pieces of firewood are burning well all around (light, high flames), you can control the air supply with the controller.
   - ⇨ Control at maximum setting = maximum heat output
   - ⇨ the flames should always burn yellow and never blue or with black flame tips (otherwise feed more air in).
     Blue = too much air
     black = too little air
   - ⇨ During combustion do not totally close the air supply (danger of deflagration!).

12.3 Heating in the transition period

In the transition period, i.e. during high external temperatures, a sudden temperature rise can disrupt the chimney draft so that the fuel gases are not completely drawn off. In this case the appliance must be filled with smaller quantities of fuel and operated with the air damper/-controller on a higher setting so that the available fuel combusts more quickly (with a flame developing) and the chimney draft stabilized as a result.

TIP

To prevent resistance in the firebed, the ashes should be removed more frequently.

13 Maintenance

Have the maintenance carried out by an Austroflamm dealer or an Austroflamm service engineer.

14 Cleaning

14.1 Cleaning the stove, flue gas ducts and flue pipe

The stove, the flue gas ducts and flues should be annually - possible even more often, e.g.

- after the chimney has been cleaned
- checked for deposits and
- cleaned as necessary.

TIP

The chimney must likewise be regularly cleaned by the chimney sweeper. Your master chimney sweep will inform you of the necessary intervals. The stove should be inspected annually by a specialist

NOTICE

Carry out any cleaning work while the stove is in the cold state.

14.2 Cleaning flue gas paths

1) Remove chimney pipes.
2) Brush or vacuum soot and dust in the stove and chimney pipes.
3) Open door.
4) Remove the upper Keramott and clean and vacuum the flue gas passages from the inside.

14.3 Emptying the ash box

- On a regular basis and in good time (at least 1 x per week) remove the ashes from the firebox and empty the ash box.
  - If the firebox is not regularly cleaned of ash then there is a danger that the combustion air openings become blocked and the appliance suffers damage.

To empty the ash box, proceed as follows:

NOTICE

Be aware when emptying the ash box that there might be embers in the ash box. Only remove the ash box when the stove is in the cold state.

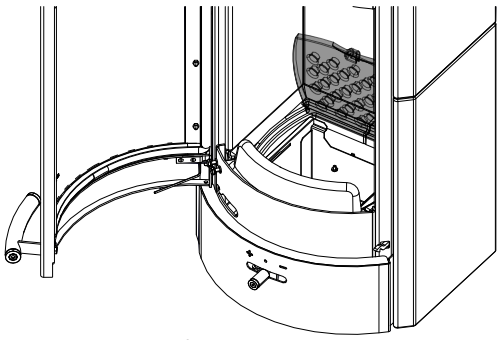

Fig. 24: Raising the grate

1) Open the door.
2) Raise the grate with the attached hook.

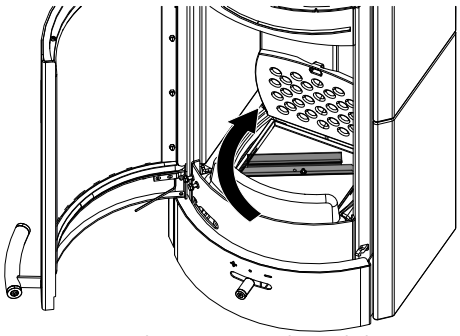

Fig. 25: Putting the cover on the ash box

3) Take the supplied cover and use it to cover the ash box.
4) Turn the handle of the cover clockwise until the handle engages.

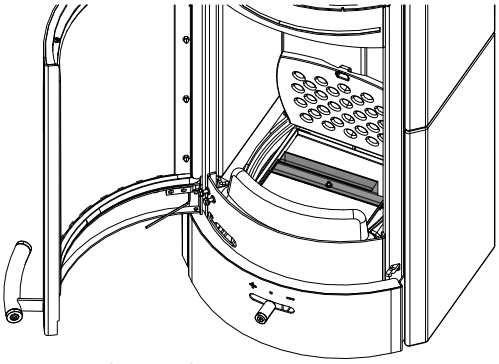

Fig. 26: Closing the cover

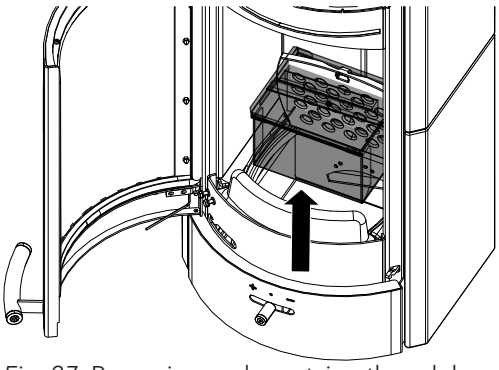

Fig. 27: Removing and emptying the ash box

5) Remove the ash box from the stove and empty it.
6) Reinsert the ash box after emptying it.
7) Turn the handle of the cover anticlockwise.
8) Take the cover off the ash box.
9) Close the grate again.

14.4 Cleaning the door window

The door glass should be cleaned. If the door glass is not cleaned regularly, soot particles can become burned in. This makes regular cleaning and maintenance all the more important.

- We recommend cleaning the door glass with our Austroflamm glass cleaner or a commercially available window glass cleaner.
- Spray the door glass with glass cleaner and leave it for a moment to take effect.
- Wipe the door glass with a cloth or household paper.
- Contact of door- or glass seals with water or cleaning agents should be avoided, as this can cause hardening and loss of function. Proper operation of the stove is only guaranteed with undamaged seals.

This will damage the glass

Abrasive cleaning agents or coarse cloths are unsuitable for cleaning the door glass, as they can cause scratches. This not only affects the appearance, but also promotes the accumulation of dust and dirt in the scratches.

14.5 Cleaning surfaces

Body

- The body can be cleaned with a dry or slightly damp cloth.
- Use of alcohol- or solvent-based cleaning products is to be avoided. The body is sealed with a special varnish and can be damaged by these.

Various surfaces

- Varnished surfaces may only be cleaned with a soft cloth (damp if necessary).
- For stainless steel surfaces there are special cleaners.
- Soak up dissolved dirt with absorbent cloths or household paper.

Ceramic cladding

For cleaning ceramic cladding, only a cleaning agent with a pH value between 5.0 and 9.0 may be used. Cleaning must be carried out with a soft cloth. Scrubbing sponges can damage the varnish.

- Weakly acidic cleaning agents (pH value below 7.0) are suitable for removing limescale deposits.
- For regular cleaning use neutral cleaning agents (pH value 7.0).
- Weakly alkaline cleaning agents (pH value above 7.0) are effective against grease- and dirt deposits.

15 Help

Problem	Cause	Solution
The glass window is sooty	Insufficient draft	from time to time (depending on use) the window must be cleaned with glass cleaner Clarification with chimney sweeper (poss. extend chimney/measure draft)
	incorrect operation of the air regulator	It is imperative that the air regulator is operated in accordance with the instructions (if secondary air is closed too far, the glass pane will become sooty very quickly)
	excessively large pieces of log log too damp	Comply with quantity and size according to the instructions
	Operating temperature has not been reached	Use more fuel, dry wood (< 15 % residual moisture), pay attention to air regulation
The chimney is too small	The chimney draft is insufficient	Ask your chimney sweep to carry out a draft measurement
	Exhaust ducts and combustion chamber sooted up	Use more fuel, dry wood (< 15 % residual moisture), pay attention to air regulation
The stove emits a strong odor and smokes externally	Stove-enamelling phase of the varnish	During the first heating cycles, the varnish hardens and smells in the process
	The stove surface is dusty/soiled	Keep the surfaces of the stove clean Keep the floor area clean around the stove
Flue gas escapes when stoking up and during the heating phase	Chimney draft too low, flue pipe connection leaky	Check connection points and if necessary reseal Check chimney draft
	Door opened before combusted down to embers	Only stoke up when only embers are present (no more visible flames)
The fire is too weak and/or goes out	Air regulator closed (-)	Air regulator open (+)
	Wood too damp	Are you using dry wood (< 15 % residual moisture)?
	External temperature too high (>15 °C)	
The room is not warm enough	Convection air grille closed	Open convection air grille
	Chimney draft too high	Clarification with chimney sweeper (poss. shorten chimney/measure draft)
The fire burns down too quickly and uncontrollably	Air regulator open (+)	Throttle combustion air supply after the operating temperature has been reached in the firebox (+ / -)
	Seals worn	Check whether the seals on the inside of the door are continuous and in working order, if necessary replace
	Firebox door not closed properly	Close the firebox door
	Chimney draft too high	Clarification with chimney sweeper (poss. shorten chimney/measure draft)
Ceramic windows become sooty very quickly	Unsuitable wood used	Use dry unrefined wood. See information about this in the Fuel section

Problem	Cause	Solution
Ceramic windows become sooty very quickly	Operating temperature not reached	Bring stove to the operating temperature
		Sooting up of the window after 8- 10 hours of fires is normal
	Chimney draft too low	Contact chimney sweep

15.1 Firebox lining

The lining of your stove consists of Keramott, a high-quality material with special combustion properties and an attractive appearance. During or after operation this lining may have superficial hairline cracks, which do not however affect functioning. Replacement of such parts is not required!

15.2 What to do in the event of a chimney fire

If fuel used is incorrect or too moist, then due to deposits in the chimney this may lead to a chimney fire.

1) Call the fire department and the district master chimney sweep!
2) Close the combustion air.
3) Enable access to the cleaning openings (e.g. basement and attic).
4) Remove all flammable material from the chimney.
5) Inform your district master chimney sweeper before recommissioning of your stove and have your chimney checked for any damage.

15.3 What to do in the event of faults

Should faults occur, your dealer will require the following details:

- Serial number and appliance model as per the type plate
- Original invoice (date of sale)
- Start-up log

16 Accessories

Have defective parts (accessories, spare parts) replaced by your specialist stove dealer. This guarantees that stove is and remains safe and functional.

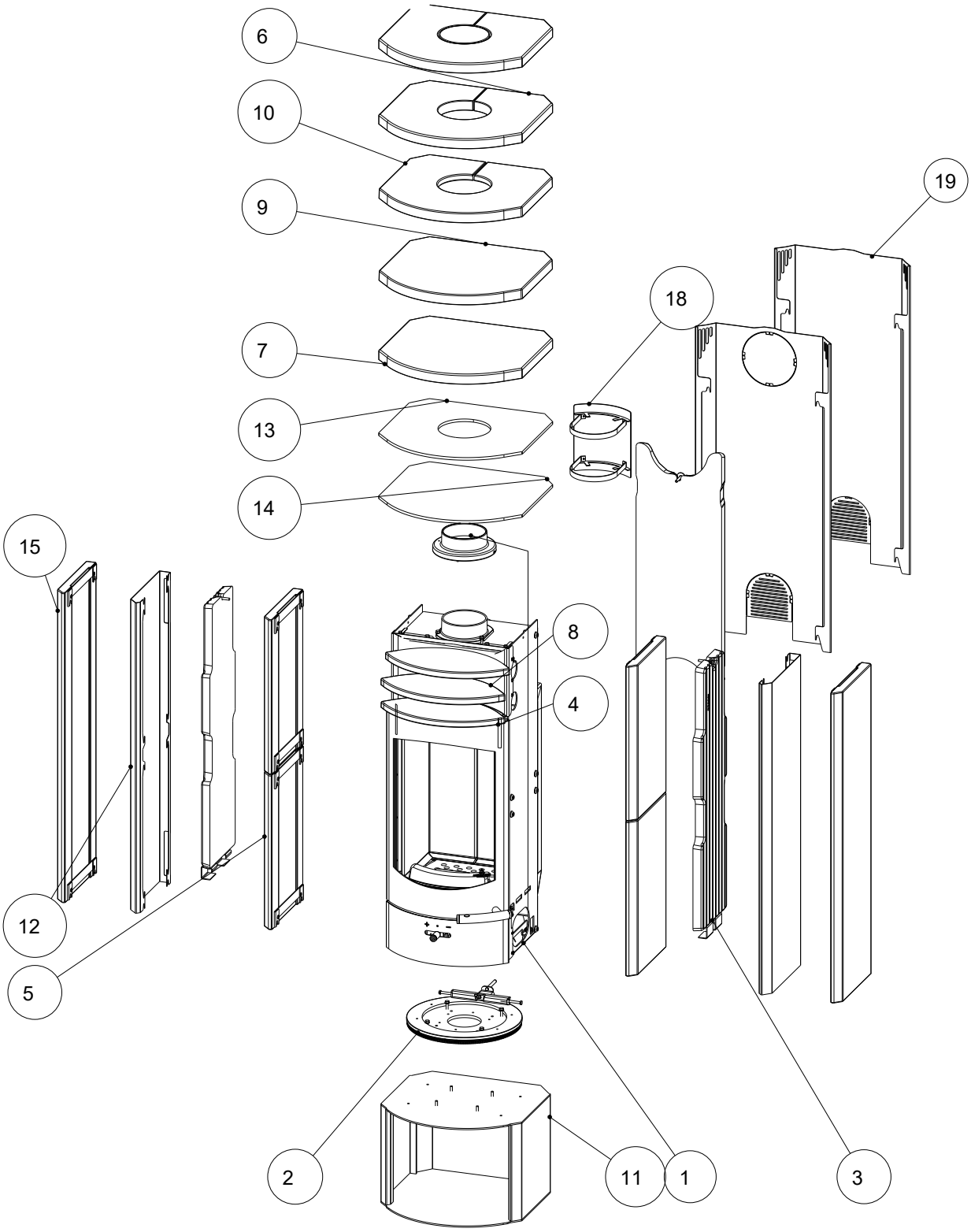

Item no.	Quantity	Article	Article no.
1	1	Basic appliance	056006
2	1	Turntable set, complete, dm130	055007
3	1	HMS, complete	056003
4	1	Warming compartment, ceramic	056005-xx
5	1	Soapstone casing	056007
6	1	Soapstone cover AO	056008
7	1	Soapstone cover AH	056009
8	1	Warming compartment, soapstone	056010
9	1	Ceramic cover AH	056011
10	1	Ceramic cover AO	056012
11	1	Cladding base, welded	056013-29
12	1	Steel cladding	056017-29
13	1	Steel cover AO	056018-29
14	1	Steel cover AH	056019-29
15	1	Sandstone cladding	056030
16	1	Elbow piece 130	620066
18	1	Heat protection shield	736307
19	1	Rear panel heat protection shield	736300

NOTICE! The installation and removal of the accessories are described in the respective installation instructions and can be found on our website in the download section "Accessory assembly instructions"

17 Spare parts

Spare parts can be ordered through our dealers.

For ordering spare parts, it is necessary to provide the type plate picture or data from the type plate of your stove. This guarantees proper spare parts for your specific stove.

18 Dismantling

For correct uninstallation and dismantling of the stove, contact your Austroflamm specialist dealer.

18.1 Removing side cladding

1) First the cover must be removed and the rear panel detached. Proceed as described in the section Removing the cover and rear panel.

The procedure described for removing the cover is the same for all versions of the cover.

2) Lift up and detach the side cladding.

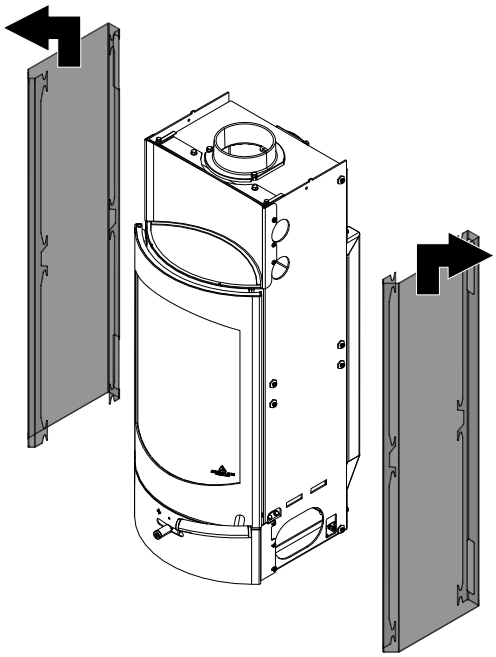

Fig. 28: Detaching the side cladding

18.2 Removing the cover and rear panel

1) Detach cover (if mounted).

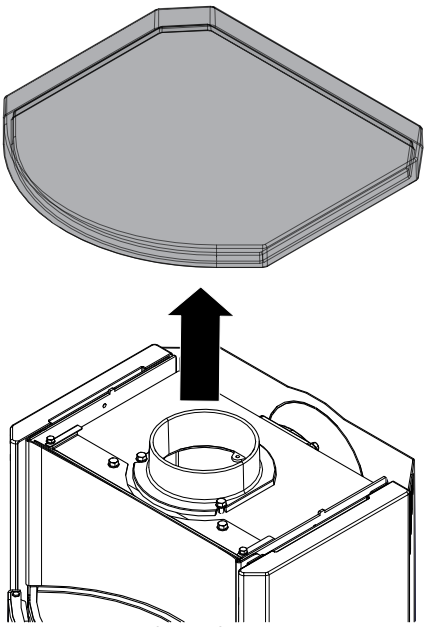

Fig. 29: Detaching the cover

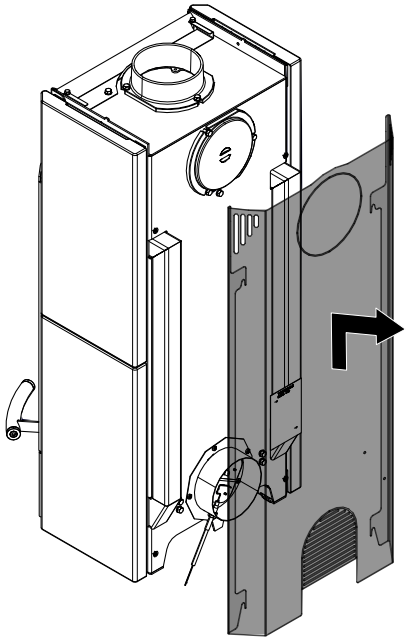

Fig. 30: Detaching the rear panel

The procedure described for removing the cover is the same for all versions of the cover.

2) Lift and detach the rear panel.

19 Disposal

NOTICE

To dispose of the stove properly, get in touch with the local (possibly municipal) waste disposal company.

NOTICE

We recommend that you remove those components of the stove which have been in contact with fire such as window, combustion chamber, grates, firebox lining (Keramott), ceramic, sensors and baffle plates and dispose of them in the household waste.

NOTICE

For correct uninstallation and dismantling of the stove, contact your Austroflamm specialist dealer.

Electric and electronic components

Remove the electric and electronic components from the appliance by dismounting them. These components must not be disposed of via non-recyclable waste. Disposal should be carried out professionally via the electrical and electronic waste return system.

Keramott

Remove Keramott components. If present, fastening elements must be removed beforehand. Keramott components that have been in contact with fire or flue gas must be disposed of. Reuse or recycling is not possible. Local disposal options must be observed.

Steel sheet

Disassemble steel-sheet components of the appliance by mechanical crushing. If present, remove seals beforehand. Dispose of steel sheet parts as metal scrap. Local disposal options must be observed.

Cast iron

Disassemble cast-iron components of the appliance by unscrewing or flexing them from one another, or alternatively by mechanical crushing. If present, remove seals beforehand. Dispose of the cast-iron parts as metal scrap. Local disposal options must be observed.

Natural stone

Mechanically remove any natural stone present from the appliance and dispose of it as construction waste. Local disposal options must be observed.

Fittings etc. (for water-carrying appliances)

Disassemble the components for carrying water by unscrewing and removing them and dispose of them as metal scrap. Local disposal options must be observed.

Seals (glass fibre)

Mechanically remove the seals from the appliance. These components must not be disposed of via non-recyclable waste.as glass fibre waste cannot be destroyed through burning. Dispose of seals as glass- and ceramic fibre waste (artificial mineral fibres (AMF)). Local disposal options must be observed.

Handles and decorative elements made of metal

If present, disassemble or remove handles and decorative elements made of metal and dispose of as metal scrap. Local disposal options must be observed.

20 Guarantee / warranty

1) **Warranty statement:** For your AUSTROFLAMM fireplace insert, we guarantee the flawless performance of the body for six years, and of all other steel and cast iron components for two years from the date of first sale.

   Steel and cast-iron parts that manifest material- and or processing defects during the guarantee period (warranty case) will be replaced for new parts provided that the warranty case has been asserted to the best of the holder's knowledge within the statutory warranty period. Functional problems with electronic accessories (e.g. Insert Control automatic SmartSpot) shall only justify a warranty claim for the particular accessory.

   Our warranty only covers the free delivery of the new parts: work- and travel times are not recorded.

2) **Exceptions:** We do not provide a guarantee on wearing parts (e.g. Keramott, seals and grate), surface coatings, varnish, glass and ceramics as well as natural stones. In the case of such defects no warranty case has occurred.

   When heating up, during operation and when cooling down, your stove may produce some noise (crackling, soft clicking, etc.). This is caused by the various materials expanding and contracting under the influence of temperature in your stove. Noise of this kind does not constitute a warranty claim and do not constitute a warranty claim.

   The territorial scope of validity of our guarantee covers Austria and Germany. In all other countries, separate conditions of the importer apply to the respective country.
   No warranty case occurs if your Austroflamm stove is not located within the territorial scope of validity, which does not change if it is transported or dispatched by Austroflamm."

3) **Requirements:** A warranty case shall only then be replaceable if your Austroflamm hybrid stove has been operated, maintained, installed and commissioned by a specialist authorized by Austroflamm, all in compliance with the user handbook. For the replaceability of the warranty case the start-up log must be received by Austroflamm within one month at the latest of the initial commissioning. In order to make a claim on the warranty, repairs to your pellet stove must only be carried out by a service engineer authorized by Austroflamm.

   The warranty claim is asserted with the invoice and serial number with the Austroflamm specialist dealer via whom the purchase was made. An unjustified warranty claim will be charged back to you.

4) **Guarantee:** This guarantee does not affect your statutory warranty rights towards us. Should your Austroflamm stove already be defective at the point of handover, you can always connect us within the framework of the statutory warrant regardless of whether there is a warranty claim or the guarantee is claimed.

21 Start-up log

Operator / Customer	Dealer / Engineer
Name	Company
Street	Street
Town and postal code	Town and postal code
Telephone	Telephone
Email	Email

Stove	Working	Comments
Model		
Serial number		
Technology		
Visuals		
Accessories		

On-site conditions	
Type of chimney [ ] brick [ ] stainless steel [ ] firebrick	Flue pipe diameter:
Chimney diameter:	Draft: Actual value: Target value: >12 Pa
Chimney height:	Outside temperature during draft measurement:
Chimney flue – Approved by chimney sweep [ ] yes [ ] no	External air supply conduit [ ] yes [ ] no
Controlled living space ventilation [ ] yes [ ] no	Length:

Instructions for Operator / Customer			
Instructions for handling the appliance explained clearly and comprehensibly		Appliance test heated together with the customer	
Terms of the guarantee and warranty explained		Cleaning and maintenance interval explained	
[ ] Start up Box [ ] user instructions handed over			

The customer confirms that the stove has been handed over in a fully functional state and free of defects.

Place, date	Signature Operator / Customer	Signature Technician

22 Service Report

Date	Technicians	Notes	Work carried out, replacement parts installed

Date	Technicians	Notes	Work carried out, replacement parts installed

Notizen / notes / appunti / remarques

Notizen / notes / appunti / remarques

AUSTROFLAMM GMBH
Austroflamm-Platz 1
A- 4631 Krenglbach

Tel: +43 (0) 7249 / 46 443
www.austroflamm.com
info@austroflamm.com

945365BA